369606c 1 01.24.2019

Occupancy Sensors for High-Bay Applications

Features

- Surface-mount and end-mount models available.
- 180° and 360° coverage lenses available.
- Low-voltage, passive infrared (PIR) sensor.
- Controls Lutron systems in high-bay applications.
- End-mount model attaches directly to industrial T5HO and T8 fixtures through an extended ½ in (13 mm) chase nipple or junction box.
- Maximum 45 ft (14 m) mounting height. (See next page for coverage diagrams.)
- Features an adjustable timeout for maximum energy savings.
- Ideal for warehouses, distribution centers, and gymnasiums.

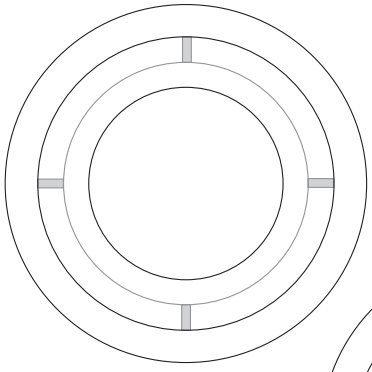

Surface-mount

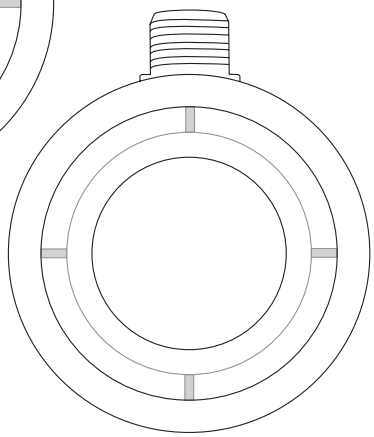

End-mount

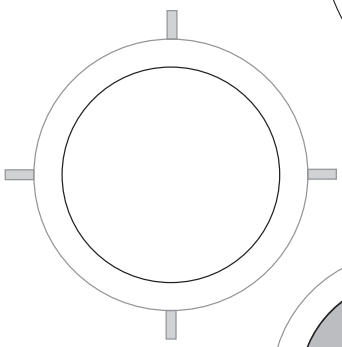

360° lens

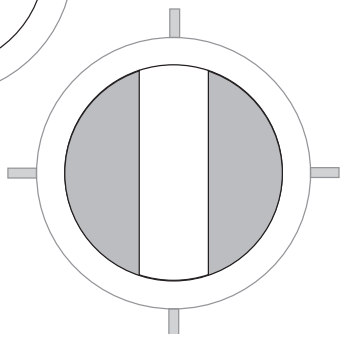

180° aisle lens

Available Models

LUT-WSPSM24V-180-xx[1]-CPN6111	Surface-mount, 180° coverage
LUT-WSPSM24V-360-xx[1]-CPN6111	Surface-mount, 360° coverage
LUT-WSPEM24V-180-xx[1]-CPN6112	End-mount, 180° coverage
LUT-WSPEM24V-360-xx[1]-CPN6112	End-mount, 360° coverage

Color

WH	White
BL	Black
GR	Gray

[1] "xx" denotes the color. See choices above.

Job Name:	Model Numbers:	
Job Number:		

Specifications

- 20 – 24 V⎓ input 30 mA max.
- User interface: 12-pin DIP switch
- Available timer options:
  - 8 second test mode
  - 4, 8, 16, and 30 minute timeouts
- Passive infrared: Dual element pyrometer and spherical Fresnel lens designed to detect major motion (i.e., walking person)
- Coverage: 360° or 180°
  See **Coverage Diagrams** for details.
  Lens ratio:
  - 30 ft (9 m) mounting height: 1.4:1
  - 30 to 45 ft (9 to 14 m) mounting height: 1.1:1
- Construction: High-impact injection-molded plastic casing
- Size and weight: 4 in (102 mm) diameter
  1½ in (38 mm) height
  7 oz (198 g)

Sensor Placement

- To detect motion, the sensor requires line-of-sight of room occupants. The sensor must also have an unobstructed view of the room. Do NOT mount behind or near tall cabinets, shelves, hanging fixtures, ceiling fans, etc. The sensor cannot see through glass objects such as patio or shower doors.
- Hot objects and moving air currents can affect the performance of the sensor. To ensure proper operation, the sensor should be mounted at least 4 ft (1.2 m) away from HVAC vents and light bulbs that are below the ceiling line.
- The performance of the sensor depends on a temperature differential between the ambient room temperature and that of the room occupants. Warmer rooms may reduce the ability of the sensor to detect occupants.
- Devices emitting Radio Frequency (RF) energy can affect the performance of sensors. To ensure proper operation, sensors should be mounted at least 4 ft (1.2 m) away from devices that emit radio waves (e.g., microwave ovens, wireless routers or other wireless devices).
- For additional information on placing sensors, please see the Occupancy/Vacancy Sensor Design and Application Guide (P/N 368-3197) located at www.lutron.com.

Coverage Diagrams

Notes

Sensor is designed to detect major motion (i.e., walking person) only

A delay of 1 to 2 seconds from occupancy detection to turn-on may be experienced

360° Lens
Side View

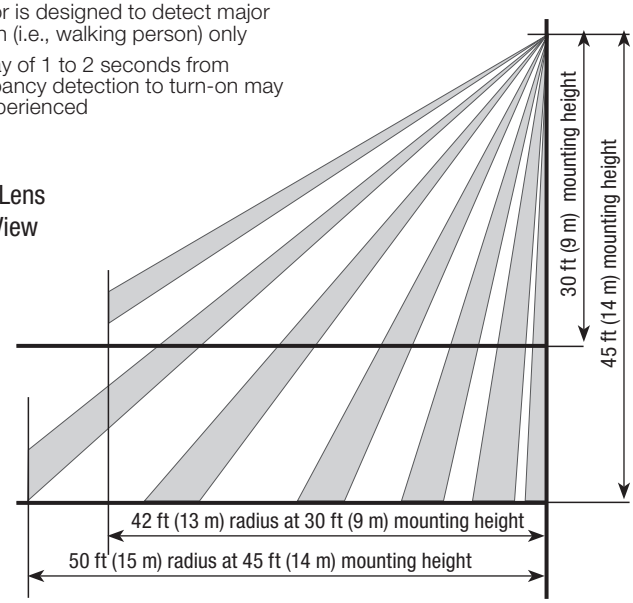

180° Lens
Top View

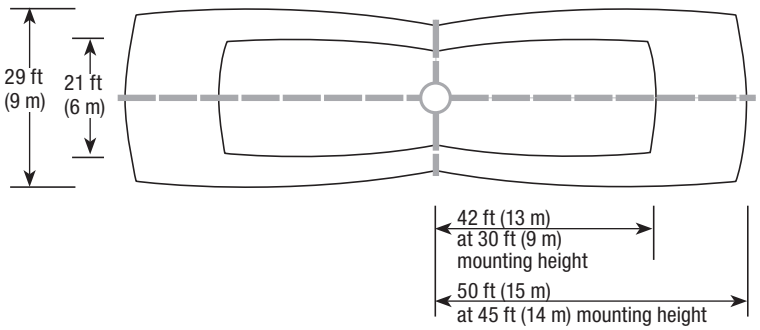

Operating Environment

- Indoor use only
- Operating temperature: 32 °F – 86 °F (0 °C – 30 °C)
- For use in climate controlled environments only
- Relative humidity (non-condensing): 0 – 95%

Certifications

- Conforms to UL STD 508, UL STD 244A
- Certified to CAN/USA STD 22.2 No. 61010-1-04

Job Name:	Model Numbers:	
Job Number:		

Surface Mounting

Refer to this mounting template (rear view of sensor) for positioning mounting screw holes and wiring access hole.

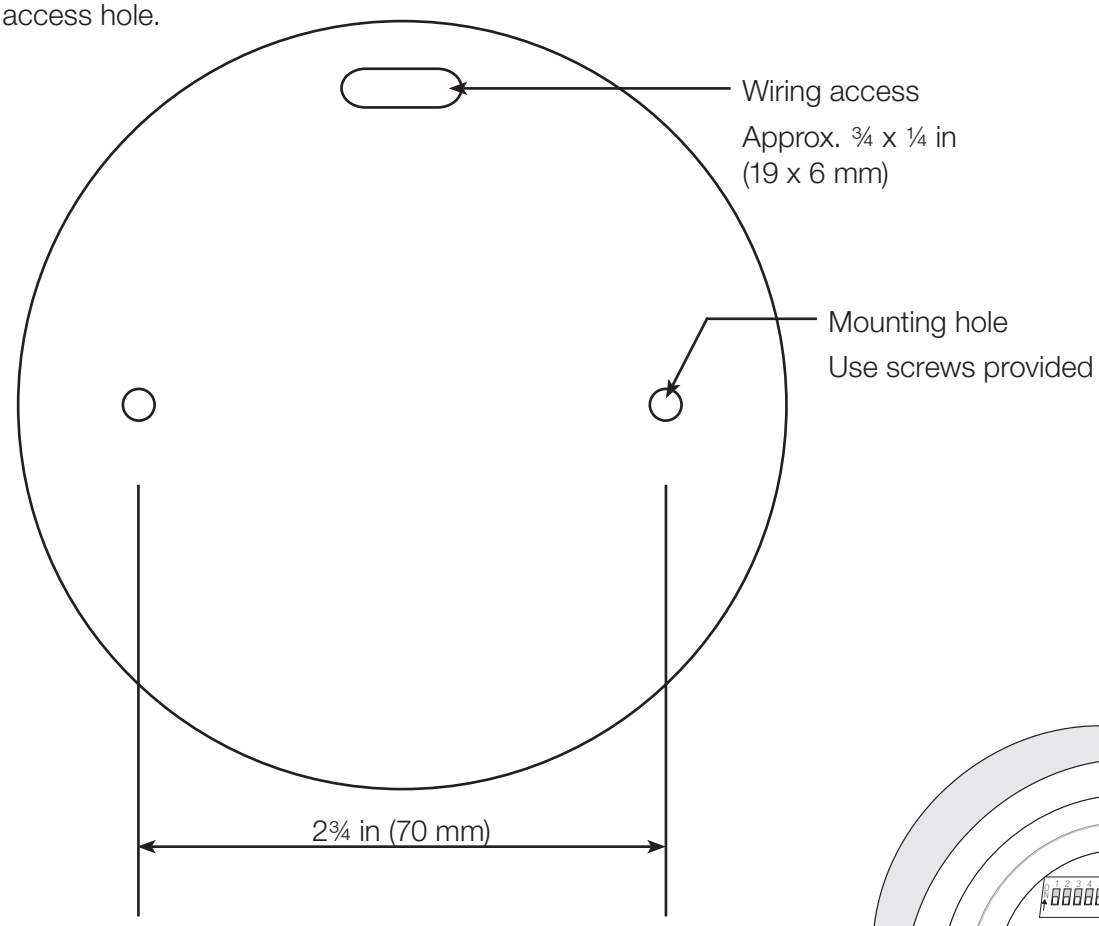

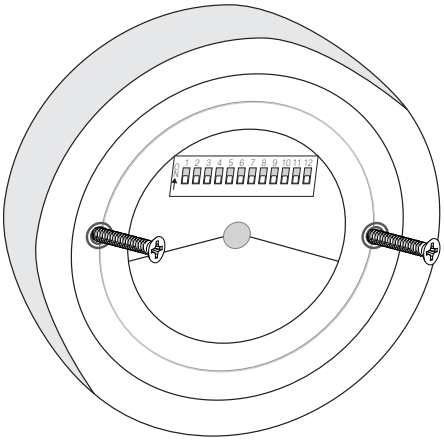

Mounting: front view of sensor (lens removed)

Wiring Diagrams

Note: Do **NOT** use blue wire for ANY installation.

Wiring to an EcoSystem Ballast

- Maximum one (1) occupancy sensor per EcoSystem ballast
- Refer to EcoSystem ballast Specification Submittal for additional details

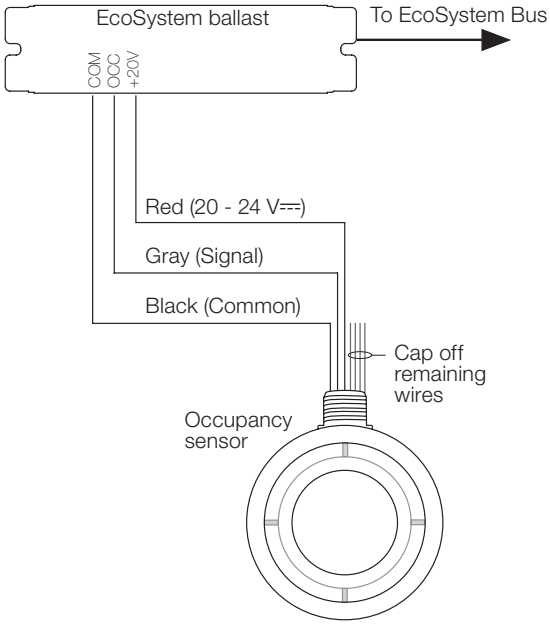

Maximum Wire Lengths

Wire Size	# Sensors		
	1	2	3
22 AWG (0.5 mm²)	750 ft (229 m)	375 ft (114 m)	250 ft (76 m)
20 AWG (0.65 mm²)	1200 ft (366 m)	600 ft (183 m)	400 ft (122 m)
18 AWG (0.75 mm²)	2400 ft (732 m)	1200 ft (366 m)	800 ft (244 m)

Wiring to a QS Sensor Module (QSM)

- Maximum four (4) occupancy sensors per QSM
- Refer to QSM Specification Submittal for additional details

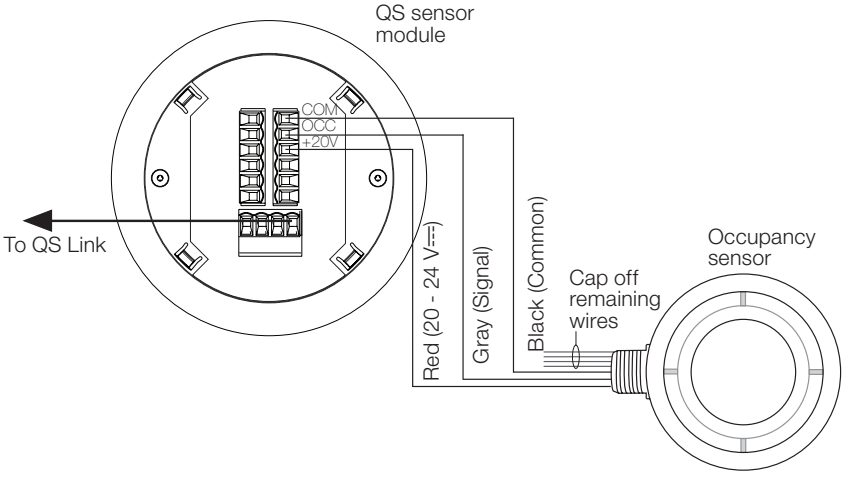

Job Name:	Model Numbers:	
Job Number:		

Wiring Diagrams

Note: Do **NOT** use blue wire for ANY installation.

Wiring to an Energi Savr Node Unit

- Maximum one (1) occupancy sensor per Energi Savr Node input group
- Refer to Energi Savr Node Specification Submittal for additional details

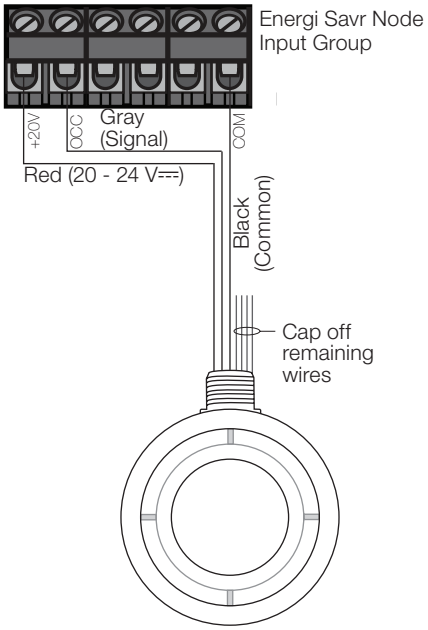

Maximum Wire Lengths

Wire Size	# Sensors		
	1	2	3
22 AWG (0.5 mm²)	750 ft (229 m)	375 ft (114 m)	250 ft (76 m)
20 AWG (0.65 mm²)	1200 ft (366 m)	600 ft (183 m)	400 ft (122 m)
18 AWG (0.75 mm²)	2400 ft (732 m)	1200 ft (366 m)	800 ft (244 m)

Wiring to a PP Series Power Pack

- Maximum three (3) occupancy sensors per power pack

Note: If using a power pack, the black wire on the occupancy sensor must be connected to the common terminal on both the Lutron lighting control system component and the power pack

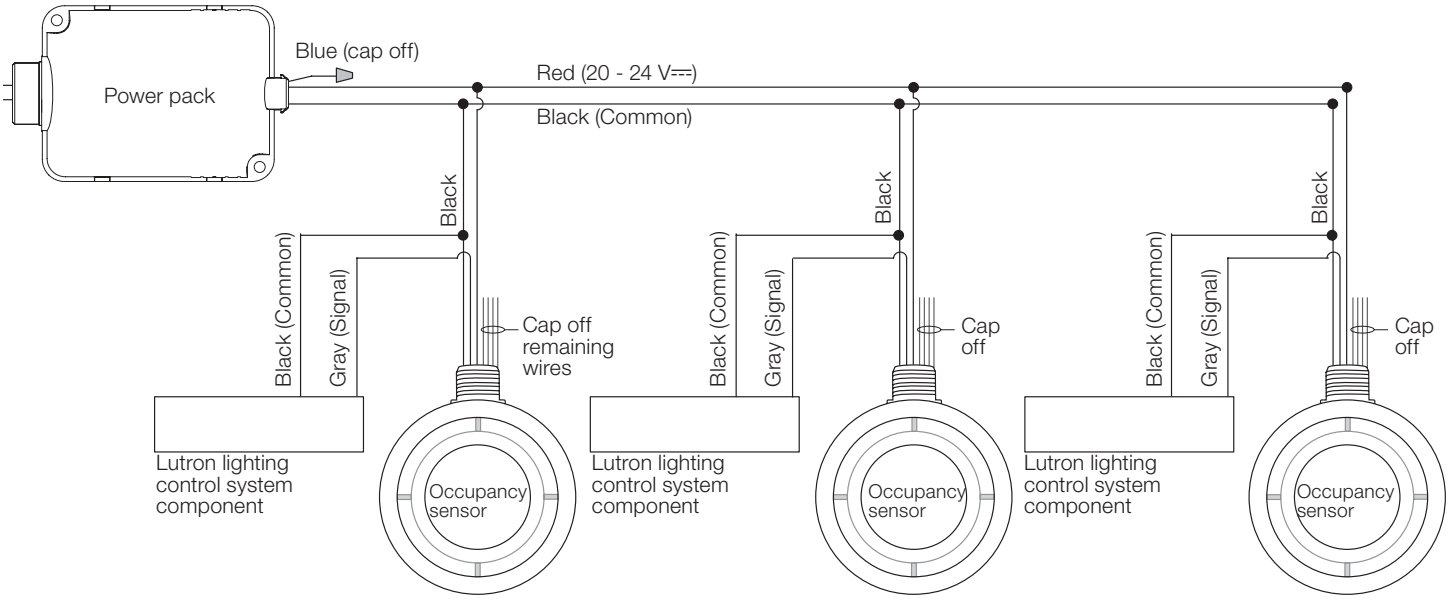

Job Name:	Model Numbers:	
Job Number:		

Operation

The internal DIP switches allow the user to select Normal or Test mode, and to select the time-out. To access the DIP switches, rotate the lens counter-clockwise until a tab lines up with the single line, then remove the lens. (To lock the lens in place, rotate it clockwise until a tab lines up with the double line).

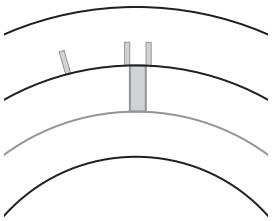

Lens locked in place

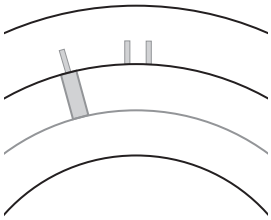

Lens unlocked

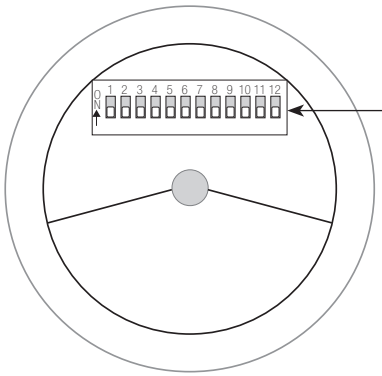

DIP Switch Function	DIP Switch Setting	
1: Mode	1 Off: Normal	1 On: Test (8 second time-out)
5 and 6: Timeout	8 minutes (default) 5 6 5: Off 6: Off	
	4 minutes 5 6 5: Off 6: On	
	16 minutes 5 6 5: On 6: Off	
	30 minutes 5 6 5: On 6: On	
2 through 4 and 7 through 12: MUST BE SET TO OFF	2 3 4 5 6 7 8 9 10 11 12 Set all to Off	

Lutron, Lutron, and EcoSystem are trademarks of Lutron Electronics Co., Inc., registered in the U.S. and other countries.
Energi Savr Node is a trademark of Lutron Electronics Co., Inc.

Job Name:	Model Numbers:	
Job Number:		